Technical Datasheet

BMT Series - Aluminum frame three phase low voltage electric motor

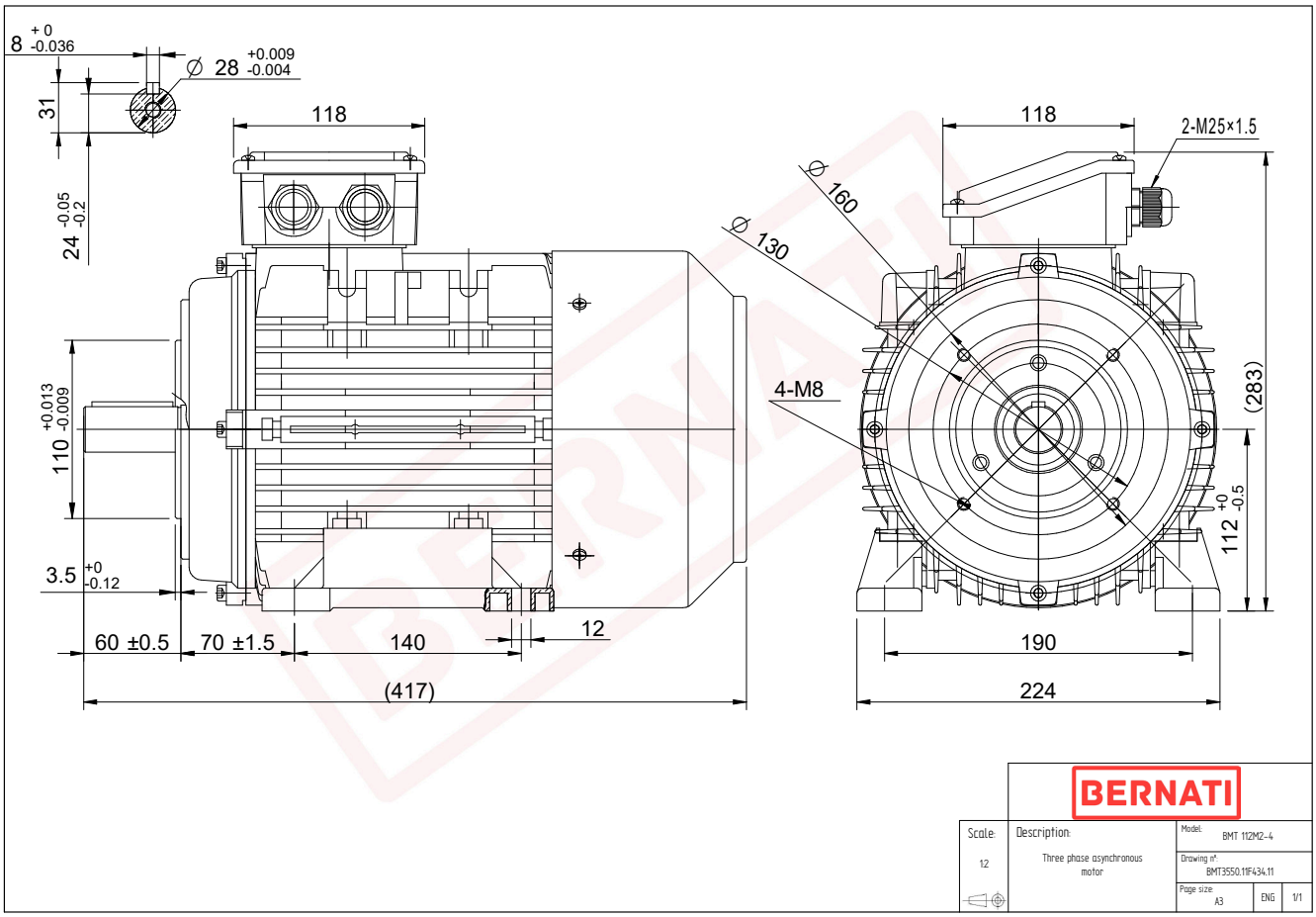

BMT

Product Code	BMT3550.11F434.11
Motor Type/Frame	BMT 112M2-4
Mounting	IM B3/B14
Efficiency Class	IE3
Output Power (kW)	5.50
Speed (rpm)	1450
Tension (V)	230/400
Frequency (Hz)	50
Current (A)	11.08
Power factor (Cos Ø)	0.80
Poles	4
Insulation Class	F
IP Class	IP55
50% Efficiency	89.1
75% Efficiency	89.9
100% Efficiency	89.6
Torque (Nm)	36.22
Tstart / Tnominal	3.80
Istart / Inominal	9.10
Tmax / Tnominal	3.70
Noise (dB)	71
PTC Thermistor	PTC 130
Weight (Kg)	39
DE Bearing	6306 2RZ C3
NDE Bearing	6206 2RZ C3