Technical Datasheet

BMT Series - Aluminum frame three phase low voltage electric motor

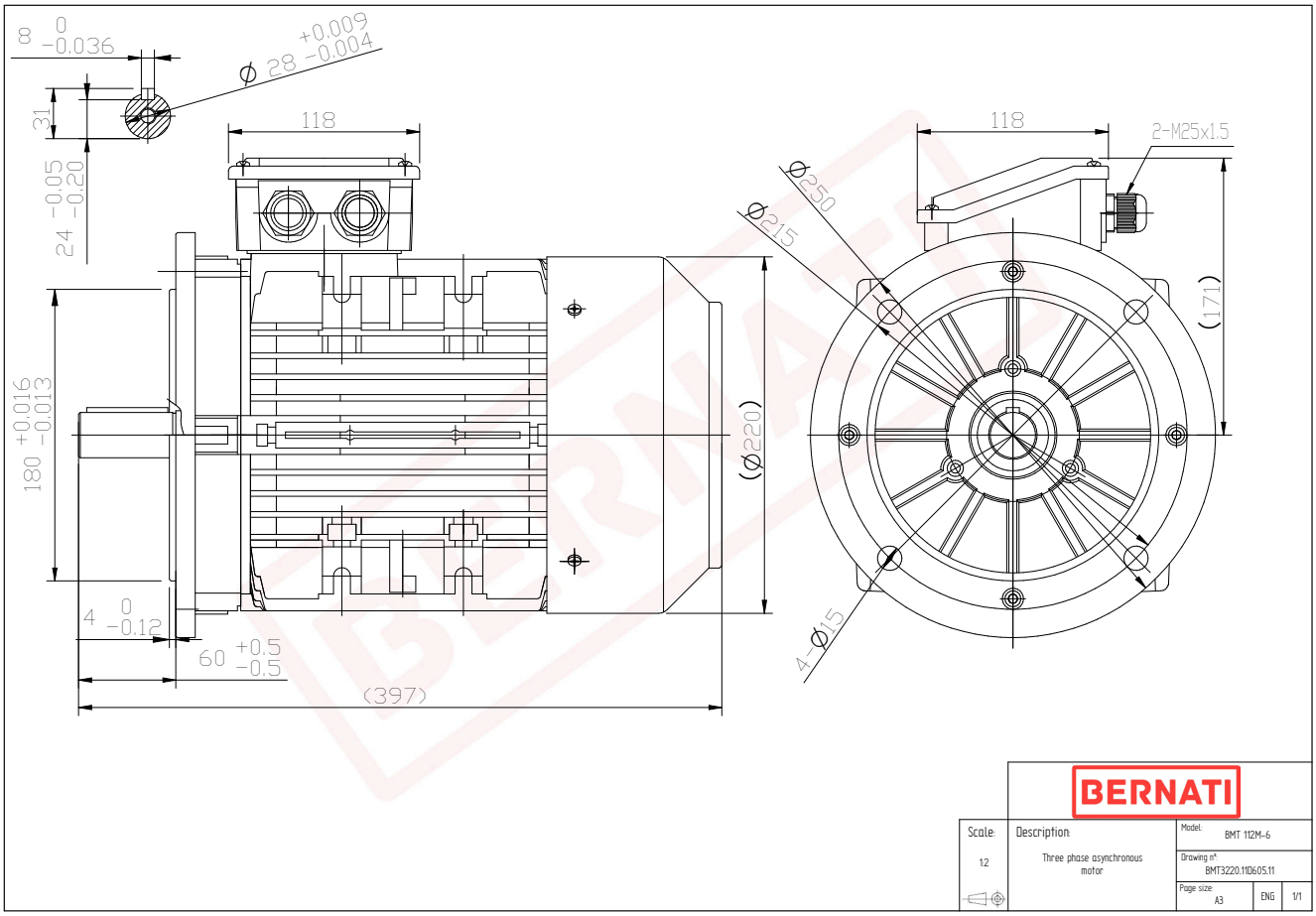

BMT

Product Code	BMT3220.11D605.11
Motor Type/Frame	BMT 112M-6
Mounting	IM B5
Efficiency Class	IE3
Output Power (kW)	2.20
Speed (rpm)	965
Tension (V)	230/400
Frequency (Hz)	50
Current (A)	5.54
Power factor (Cos Ø)	0.68
Poles	6
Insulation Class	F
IP Class	IP55
50% Efficiency	83.2
75% Efficiency	84.5
100% Efficiency	84.3
Torque (Nm)	21.77
Tstart / Tnominal	2.00
Istart / Inominal	5.50
Tmax / Tnominal	2.50
Noise (dB)	64
PTC Thermistor	PTC 130
Weight (Kg)	27
DE Bearing	6306 2RZ C3
NDE Bearing	6206 2RZ C3