Technical Datasheet

BMT Series - Aluminum frame three phase low voltage electric motor

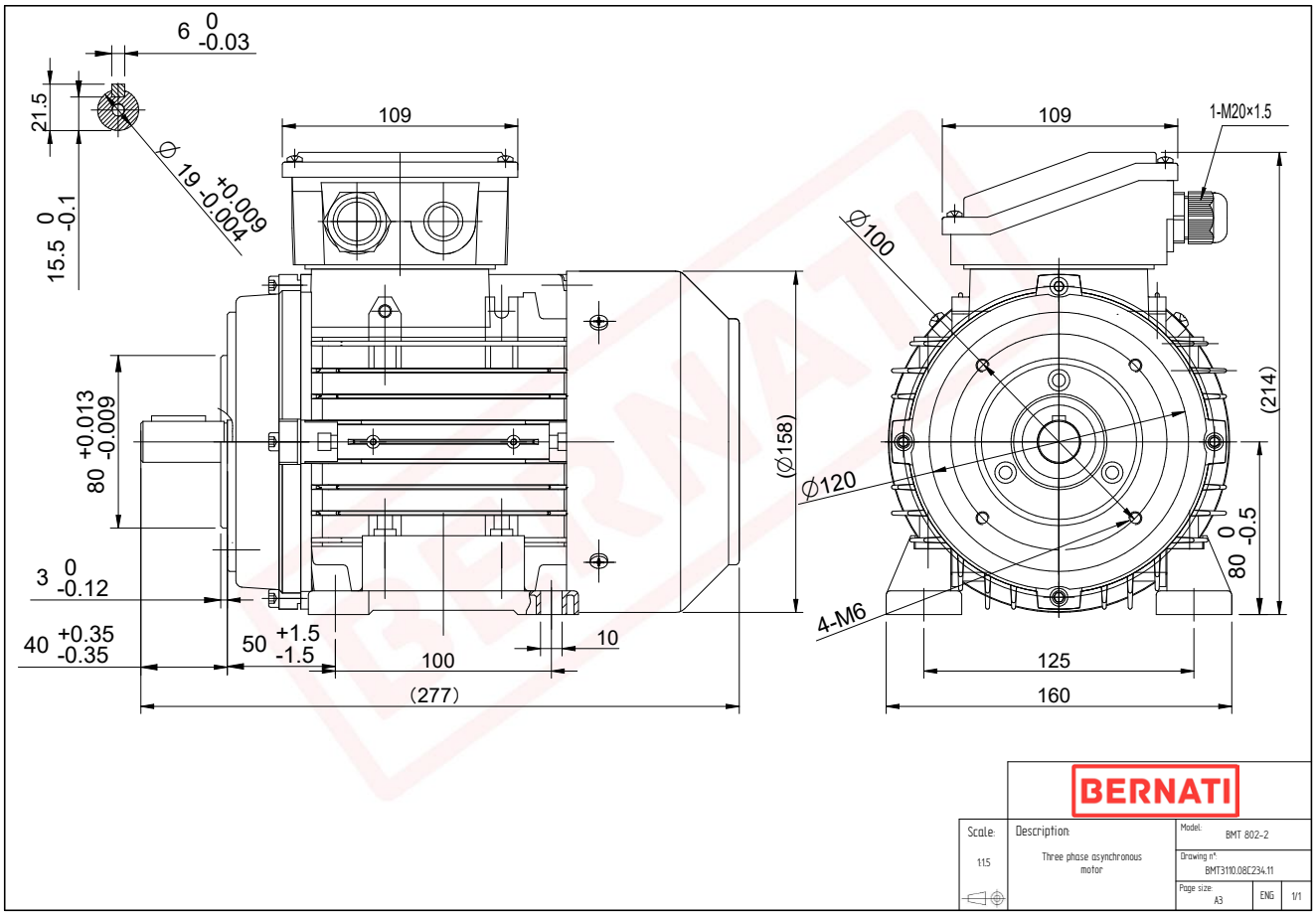

BMT

Product Code	BMT3110.08C234.11
Motor Type/Frame	BMT 802-2
Mounting	IM B3/B14
Efficiency Class	IE3
Output Power (kW)	1.10
Speed (rpm)	2900
Tension (V)	230/400
Frequency (Hz)	50
Current (A)	2.34
Power factor (Cos Ø)	0.82
Poles	2
Insulation Class	F
IP Class	IP55
50% Efficiency	79.9
75% Efficiency	82.5
100% Efficiency	82.7
Torque (Nm)	3.62
Tstart / Tnominal	3.20
Istart / Inominal	7.80
Tmax / Tnominal	3.20
Noise (dB)	67
PTC Thermistor	PTC 130
Weight (Kg)	11
DE Bearing	6204 2RZ C3
NDE Bearing	6204 2RZ C3