Technical Datasheet

BMM Series - Aluminum frame single phase electric motor

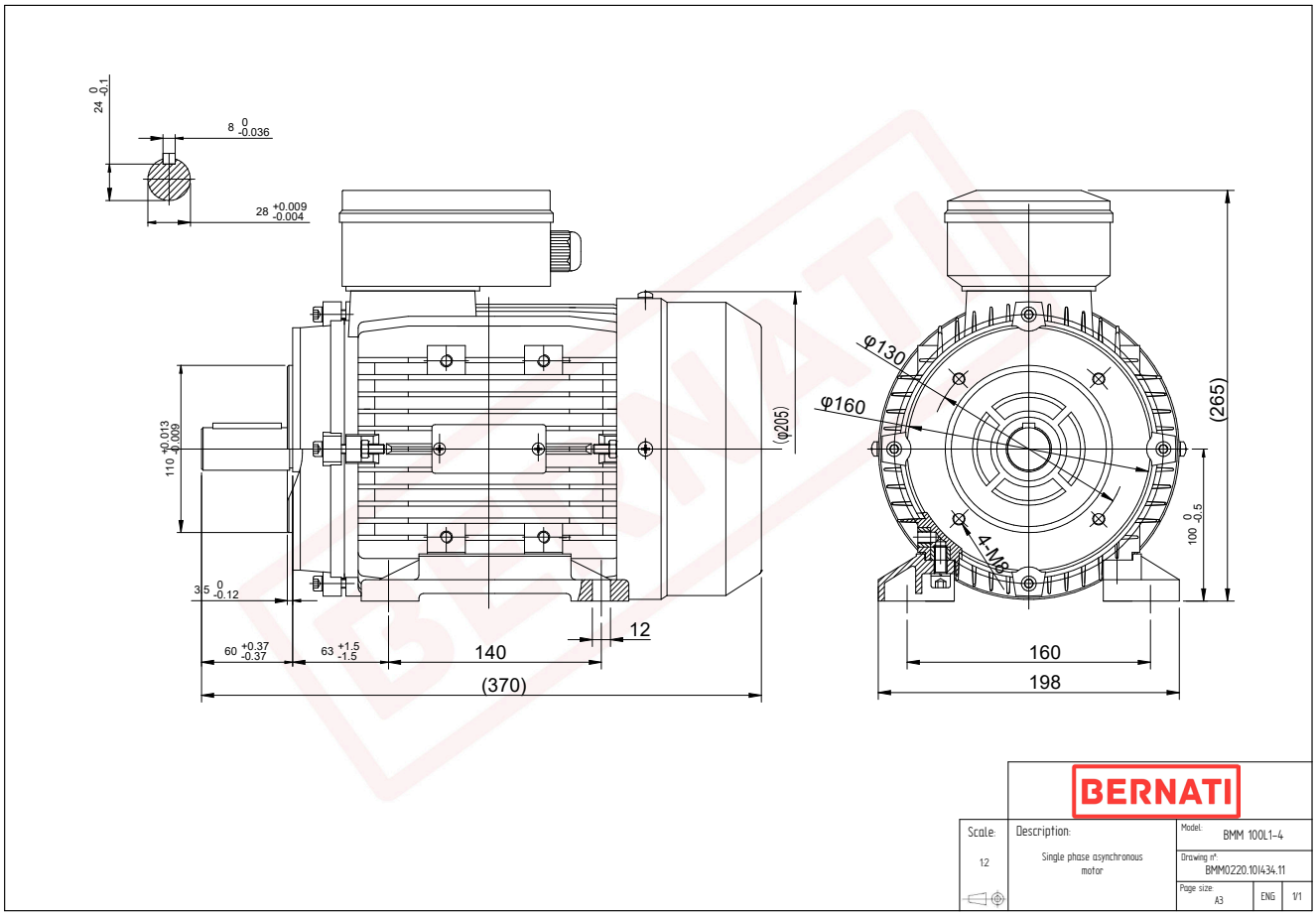

BMM

Product Code	BMM0220.10l434.11
Motor Type/Frame	BMM 100L1-4
Mounting	IM B3/B14
Output Power (kW)	2.20
Speed (rpm)	1450
Tension (V)	230
Frequency (Hz)	50
Current (A)	13.00
Power factor (Cos Ø)	0.90
Poles	4
Insulation Class	F
IP Class	IP55
100% Efficiency	79.0
Torque (Nm)	14.50
Tstart / Tnominal	0.30
Istart / Inominal	5.00
Tmax / Tnominal	1.80
Noise (dB)	78
PTC Thermistor	N/A
Weight (Kg)	23
DE Bearing	6206 2RZ C3
NDE Bearing	6206 2RZ C3