Technical Datasheet

BCT Series - Cast iron frame three phase low voltage electric motor

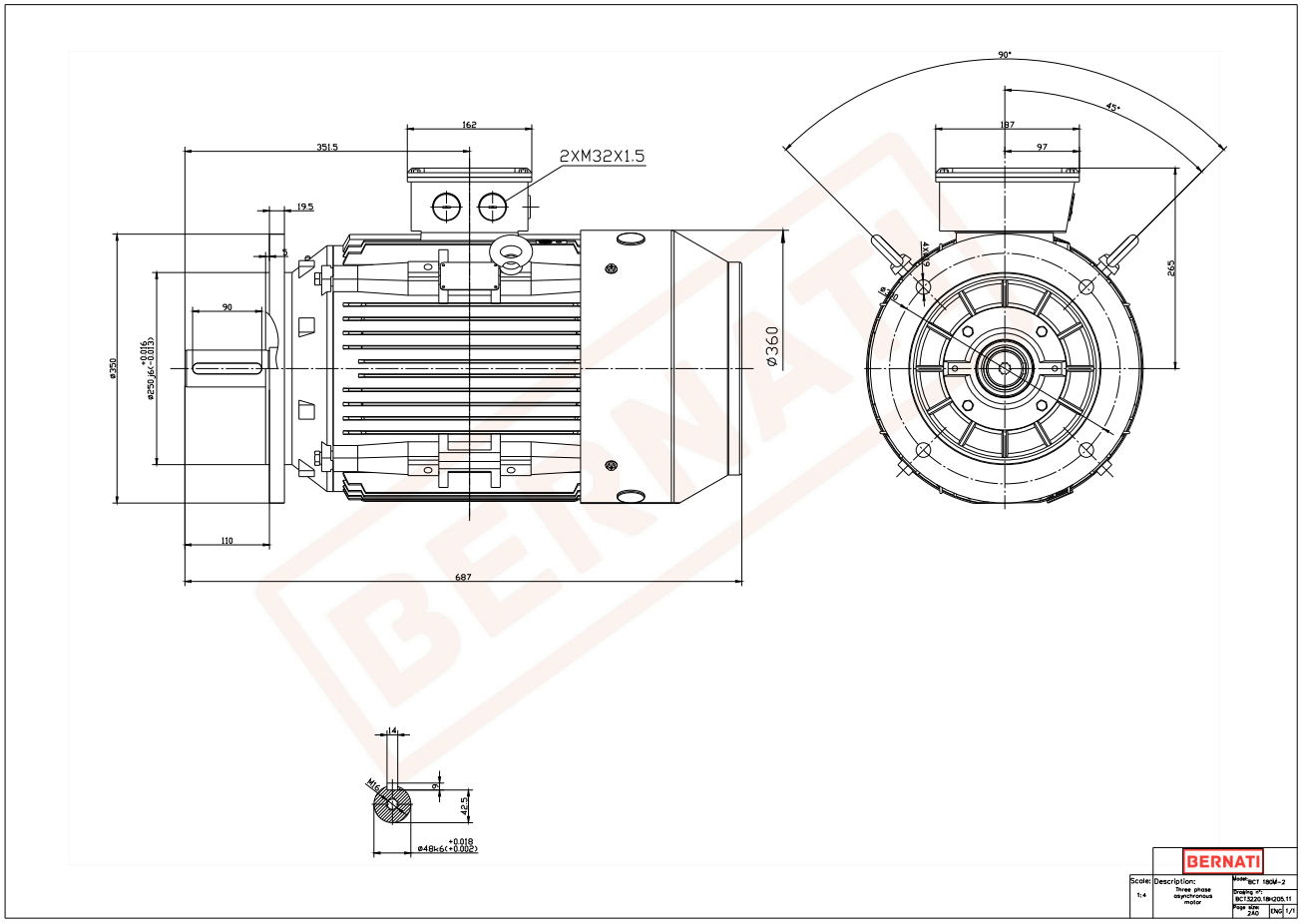

BCT

Product Code	BCT3220.18D205.11
Motor Type/Frame	BCT 180M-2
Mounting	IM B5
Efficiency Class	IE3
Output Power (kW)	22.00
Speed (rpm)	2945
Tension (V)	230/400
Frequency (Hz)	50
Current (A)	38.50
Power factor (Cos Ø)	0.90
Poles	2
Insulation Class	F
IP Class	IP55
50% Efficiency	93.6
75% Efficiency	94.1
100% Efficiency	92.7
Torque (Nm)	71.30
Tstart / Tnominal	2.50
Istart / Inominal	9.00
Tmax / Tnominal	3.00
Noise (dB)	89
PTC Thermistor	PTC 130
Weight (Kg)	183
DE Bearing	6311 C3
NDE Bearing	6311 C3