Technical Datasheet

BCT Series - Cast iron frame three phase low voltage electric motor

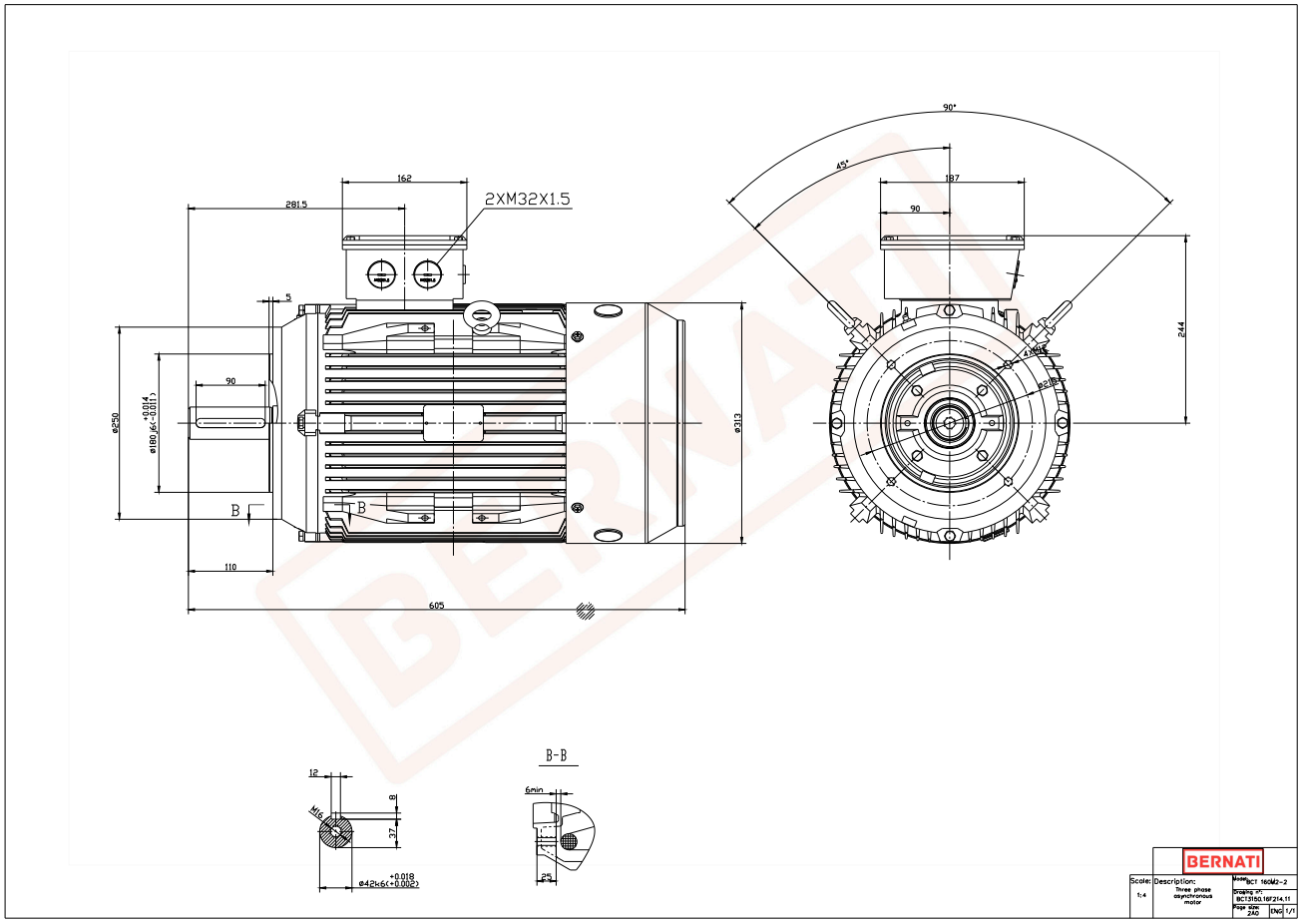

BCT

Product Code	BCT3150.16F214.11
Motor Type/Frame	BCT 160M2-2
Mounting	IM B14
Efficiency Class	IE3
Output Power (kW)	15.00
Speed (rpm)	2940
Tension (V)	230/400
Frequency (Hz)	50
Current (A)	26.20
Power factor (Cos Ø)	0.90
Poles	2
Insulation Class	F
IP Class	IP55
50% Efficiency	92.9
75% Efficiency	93.1
100% Efficiency	91.9
Torque (Nm)	48.70
Tstart / Tnominal	2.50
Istart / Inominal	10.00
Tmax / Tnominal	3.00
Noise (dB)	86
PTC Thermistor	PTC 130
Weight (Kg)	128
DE Bearing	6309 C3
NDE Bearing	6309 C3