Technical Datasheet

BCT Series - Cast iron frame three phase low voltage electric motor

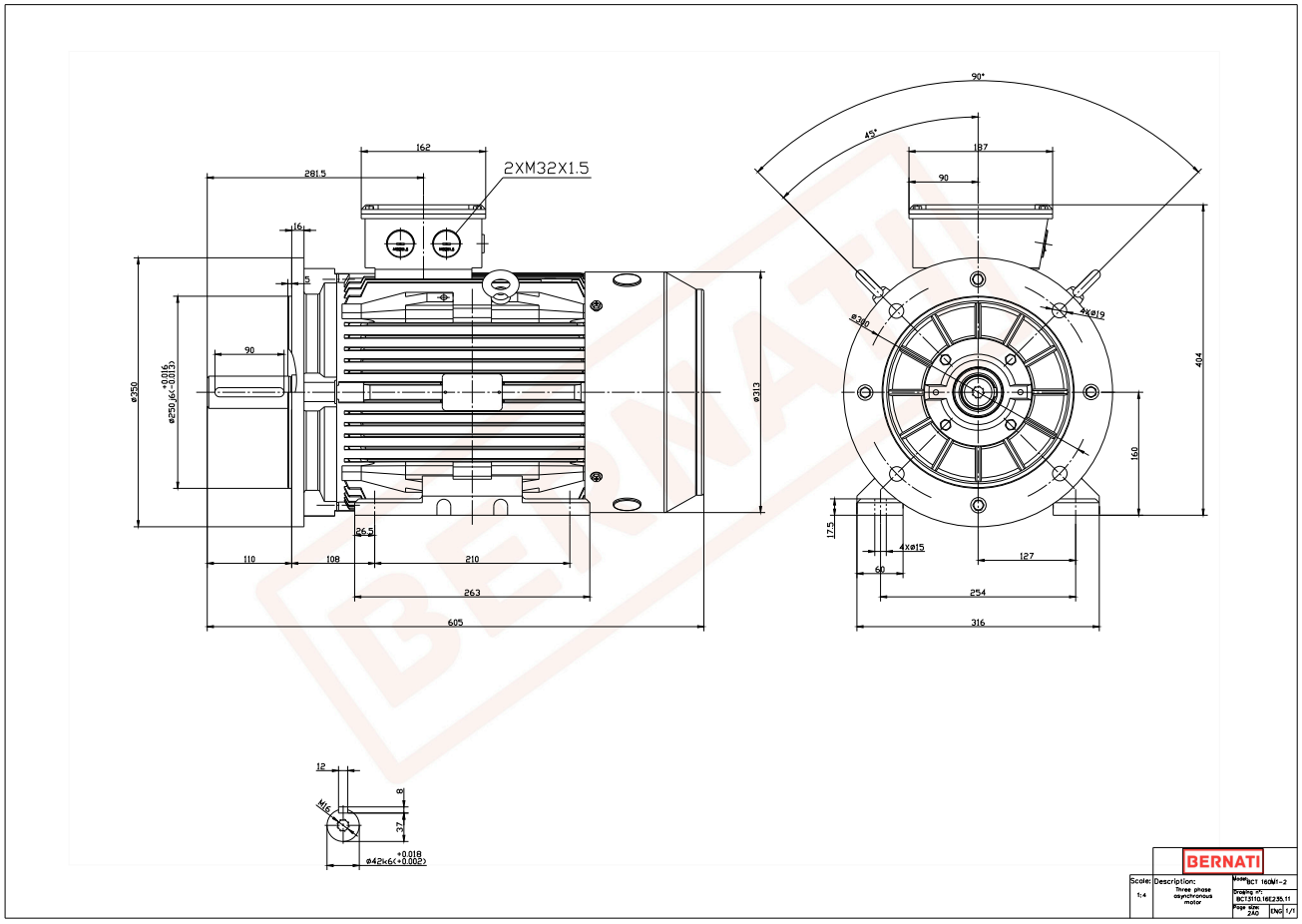

BCT

Product Code	BCT3110.16E235.11
Motor Type/Frame	BCT 160M1-2
Mounting	IM B3/B5
Efficiency Class	IE3
Output Power (kW)	11.00
Speed (rpm)	2930
Tension (V)	230/400
Frequency (Hz)	50
Current (A)	19.30
Power factor (Cos Ø)	0.90
Poles	2
Insulation Class	F
IP Class	IP55
50% Efficiency	93.0
75% Efficiency	93.8
100% Efficiency	91.2
Torque (Nm)	35.90
Tstart / Tnominal	2.50
Istart / Inominal	9.50
Tmax / Tnominal	3.00
Noise (dB)	86
PTC Thermistor	PTC 130
Weight (Kg)	118
DE Bearing	6309 C3
NDE Bearing	6309 C3