Technical Datasheet

BCL Series - Aluminum frame three phase low voltage electric motor

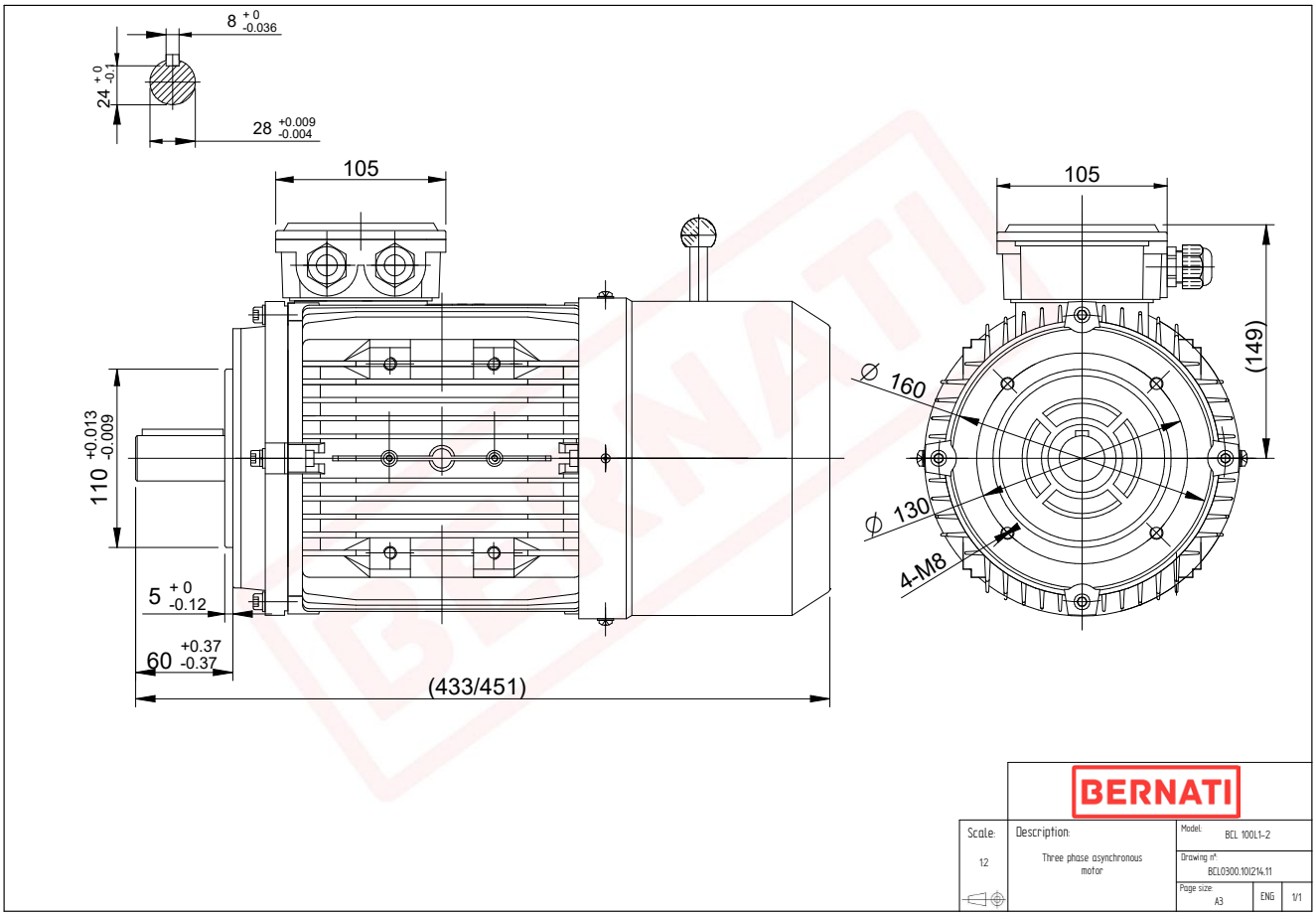

BCL

Product Code	BCL0300.10I214.11
Motor Type/Frame	BCL 100L1-2
Mounting	IM B14
Output Power (kW)	3.00
Speed (rpm)	2875
Tension (V)	230/400
Frequency (Hz)	50
Current (A)	6.00
Power factor (Cos Ø)	0.90
Poles	2
Insulation Class	F
IP Class	IP55
50% Efficiency	83.0
75% Efficiency	84.5
100% Efficiency	83.9
Tstart / Tnominal	2.80
Istart / Inominal	8.10
Tmax / Tnominal	3.20
Noise (dB)	76
PTC Thermistor	N/A
Weight (Kg)	27
DE Bearing	6206 2RZ C3
NDE Bearing	6206 2RZ C3