Technical Datasheet

BCL Series - Aluminum frame three phase low voltage electric motor

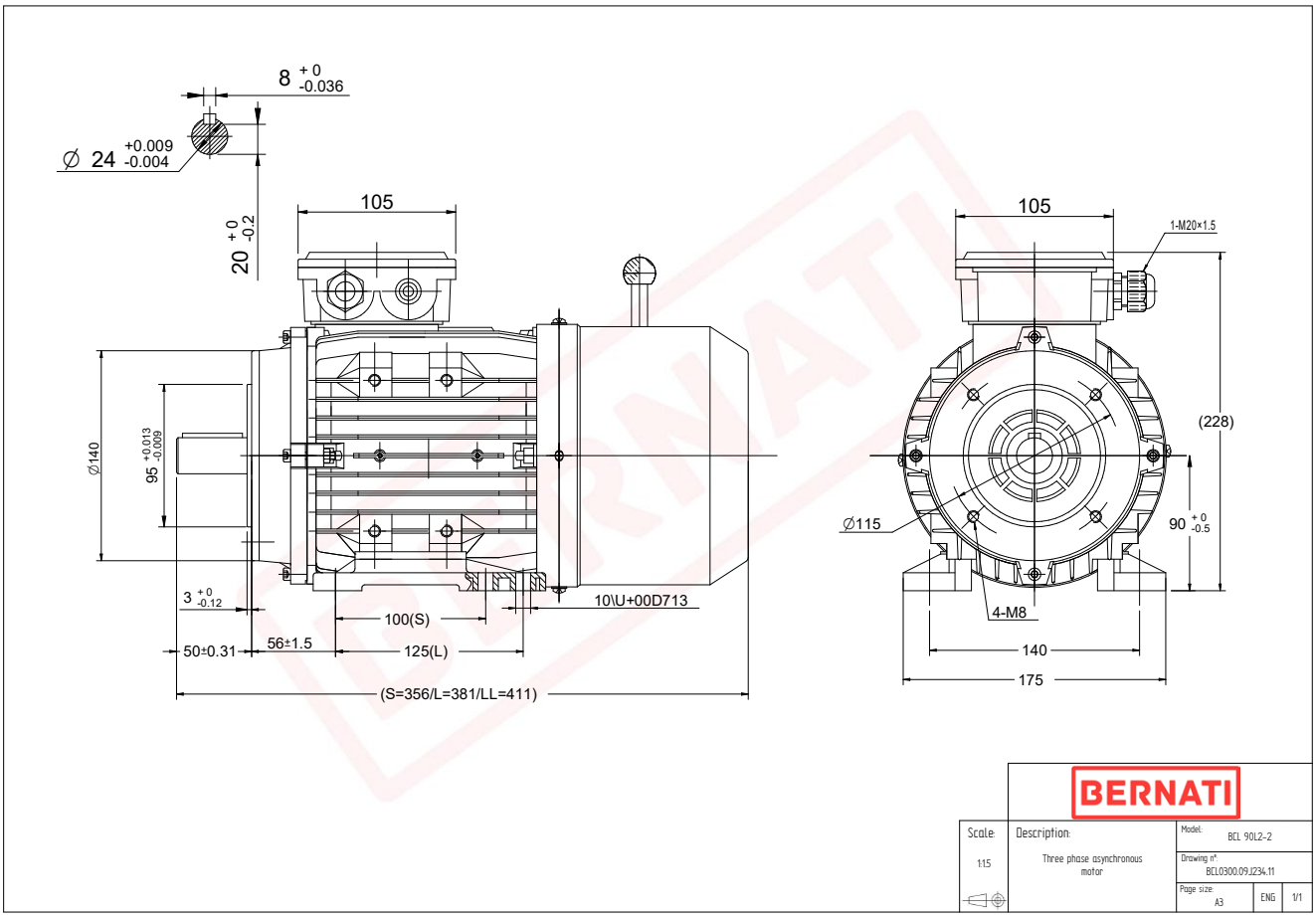

BCL

Product Code	BCL0300.09J234.11
Motor Type/Frame	BCL 90L2-2
Mounting	IM B3/B14
Output Power (kW)	3.00
Speed (rpm)	2830
Tension (V)	230/400
Frequency (Hz)	50
Current (A)	6.10
Power factor (Cos Ø)	0.90
Poles	2
Insulation Class	F
IP Class	IP55
50% Efficiency	82.3
75% Efficiency	83.5
100% Efficiency	82.4
Tstart / Tnominal	4.40
Istart / Inominal	8.00
Tmax / Tnominal	4.20
Noise (dB)	74
PTC Thermistor	N/A
Weight (Kg)	21
DE Bearing	6205 2RZ C3
NDE Bearing	6205 2RZ C3