Technical Datasheet

BCL Series - Aluminum frame three phase low voltage electric motor

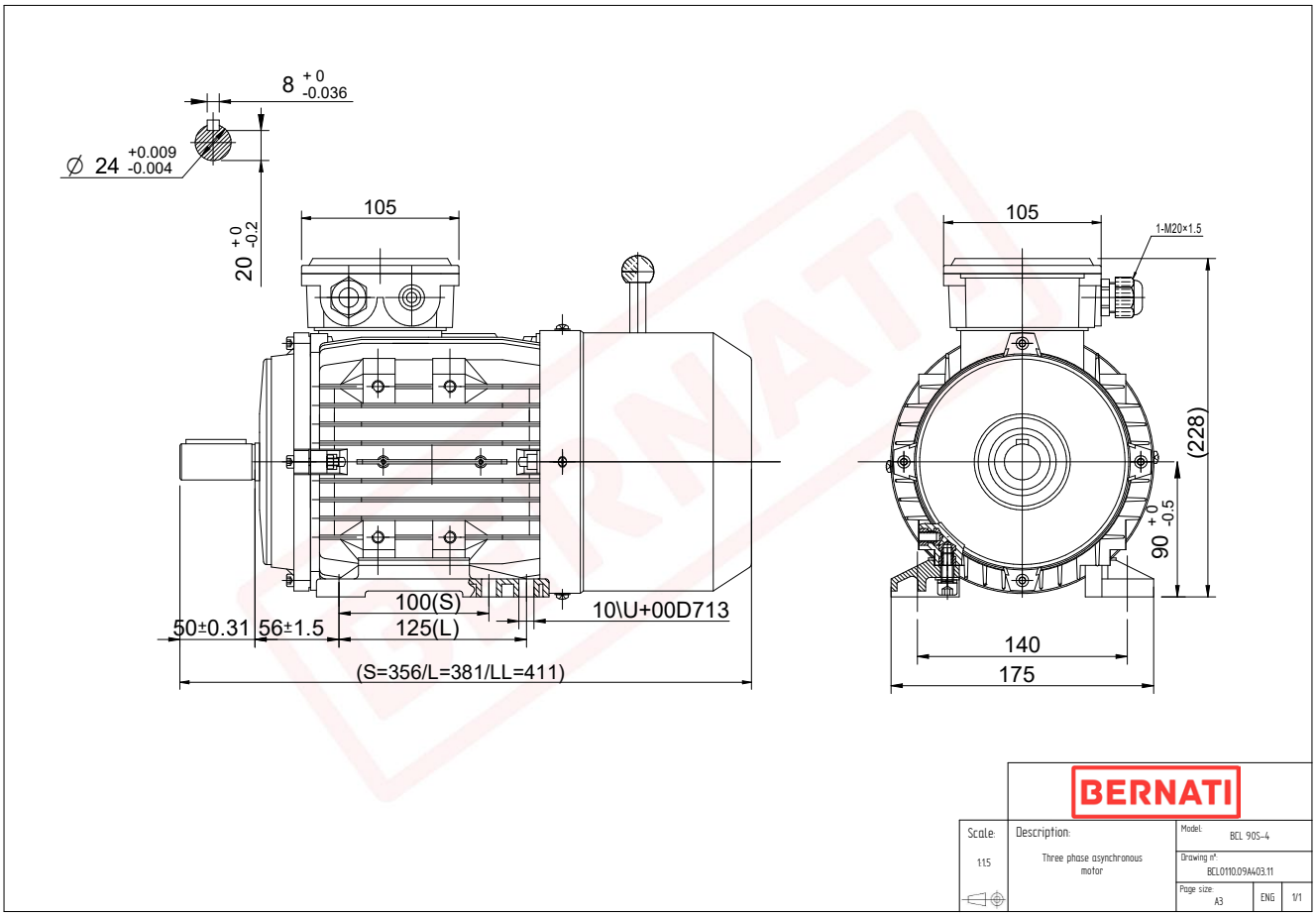

BCL

Product Code	BCL0110.09A403.11
Motor Type/Frame	BCL 90S-4
Mounting	IM B3
Output Power (kW)	1.10
Speed (rpm)	1400
Tension (V)	230/400
Frequency (Hz)	50
Current (A)	2.70
Power factor (Cos Ø)	0.80
Poles	4
Insulation Class	F
IP Class	IP55
50% Efficiency	74.4
75% Efficiency	76.7
100% Efficiency	75.5
Tstart / Tnominal	2.90
Istart / Inominal	6.00
Tmax / Tnominal	2.70
Noise (dB)	61
PTC Thermistor	N/A
Weight (Kg)	15
DE Bearing	6205 2RZ C3
NDE Bearing	6205 2RZ C3