Technical Datasheet

BCL Series - Aluminum frame three phase low voltage electric motor

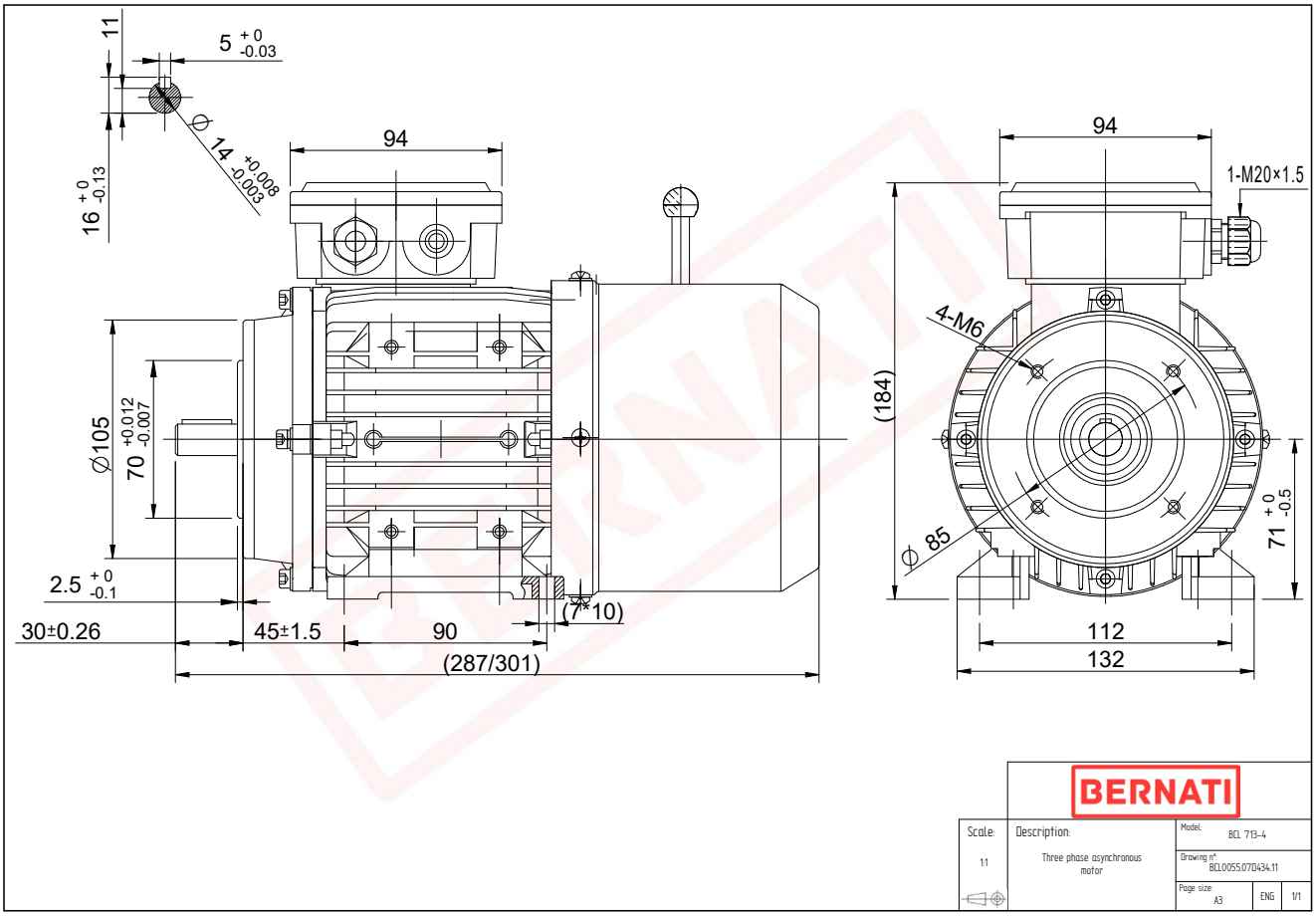

BCL

Product Code	BCL0055.07D434.11
Motor Type/Frame	BCL 713-4
Mounting	IM B3/B14
Output Power (kW)	0.55
Speed (rpm)	1390
Tension (V)	230/400
Frequency (Hz)	50
Current (A)	1.50
Power factor (Cos Ø)	0.70
Poles	4
Insulation Class	F
IP Class	IP55
50% Efficiency	66.8
75% Efficiency	71.6
100% Efficiency	71.9
Tstart / Tnominal	2.80
Istart / Inominal	4.80
Tmax / Tnominal	2.80
Noise (dB)	57
PTC Thermistor	N/A
Weight (Kg)	9
DE Bearing	6202 2RZ C3
NDE Bearing	6202 2RZ C3